/ PROLOGUE 2
/ INTRODUCTION 4
/ CONTRIBUTING 6
/ ALL 9
/ COMPONENTS SEE LEAFLET*
/ CONNECTORS SEE LEAFLET*
/ ARRANGEMENTS SEE LEAFLET*

* INFINITE ARRANGEMENTS IS CONTINUALLY GROWING. FOR THIS REASON, PAGE NUMBERS MAY VARY BETWEEN COPIES.

PROLOGUE

“A hierarchal, vertical, centralized, top down and copyrighted system with passive end users and static products makes way for a network based, horizontal, decentralized, bottom up, partly copyrighted system with active end-users and dynamic products...

This new consumer is taking control rather than letting himself being led by the head of a hierarchal structure. The consumer becomes someone to work with. He is a socialist with capitalist tools.”

-Jan Boelen

INTRODUCTION

Infinite Arrangements is a radical proposal for rethinking how domestic products are bought, assembled, and reassembled. It is grounded in a single material premise: the aluminum sheet. Folded, perforated, and joined in countless ways, this sheet becomes the foundational building block for an open modular system. Every product in this book is designed to be disassembled and reconfigured. Nothing is fixed, and nothing is final.

The system is open. Anyone can contribute new *Components*, *Connectors*, or *Arrangements*, expanding a shared vocabulary of parts. Through this participatory framework, a dynamic and evolving collection of objects emerges.

CONTRIBUTING GUIDELINES

Components

- Components must be fabricated from one or more aluminum sheets of any thickness.

- These sheets can be folded, perforated, scratched, painted, anodized or altered in any way imaginable.

Connectors

- *Connectors* can be made of any material.

- They must be able to join two or more *Components* together securely.

Arrangements

- An *Arrangement* is a declaration that two or more *Components* or *Connectors* form a viable object.

- The term “viable object” is however you define it.

- There is no minimum threshold for utility. Sculptures, experiments, and poetic gestures are all welcome.

CONTRIBUTING FAQS

Why another modular system?

Because modularity is one of the basic principles of sustainable design.

Why aluminum?

Because aluminum is light, durable, and infinitely recyclable. This makes it a strong fit for a system that promotes play, reconfigurability, and longevity.

What is the process for contributing?

Visit infinitearrangements.net. There, you’ll find a submission form where you can upload your proposal and include details about your *Component*, *Connector*, or *Arrangement*. Once submitted, it will be reviewed and added to the growing collection.

How does this catalog get updated?

When a new contribution is accepted, all future orders from infinitearrangements.net will include the latest version of the catalog.

For existing catalog owners, a free PDF version is always available at infinitearrangements.net/catalog. You can print any new pages in A5 format and add them directly to your binder.

CM • 000

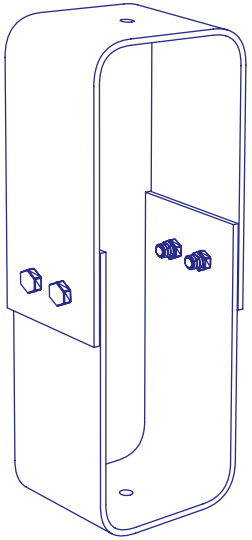

- Two folded 3mm aluminum sheets
- Nuts and bolts to keep them together
- Two 6mm holes at top and bottom
- 60mm W x 242mm H x 60mm D

FRONT

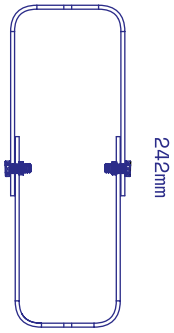

RIGHT

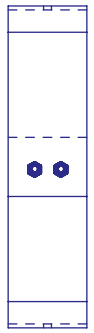

Used in the following arrangements:

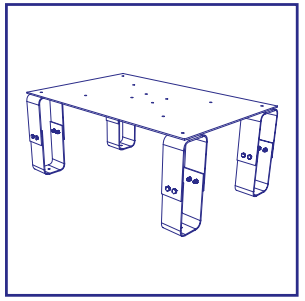

Space Table

[future_arrangement]

[future_arrangement]

CM . 001

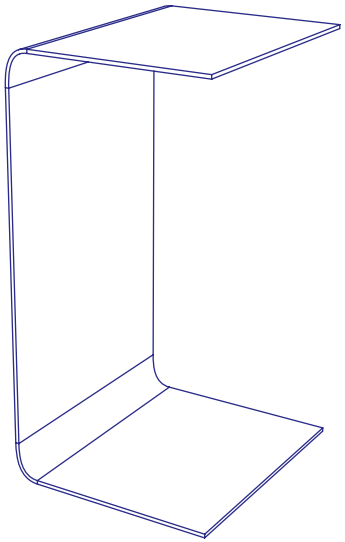

- One 3mm aluminum sheet, folded twice
- Surprisingly versatile
- Slight bend radius at folds
- 200mm W x 340mm H x 200mm D

RIGHT

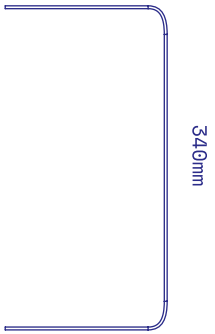

TOP

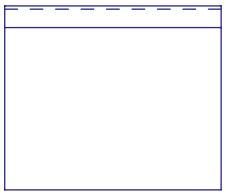

Used in the following arrangements:

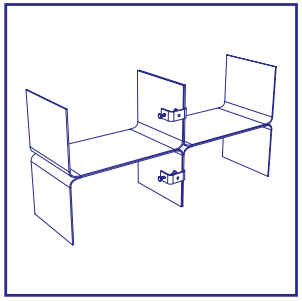

Folded Storage

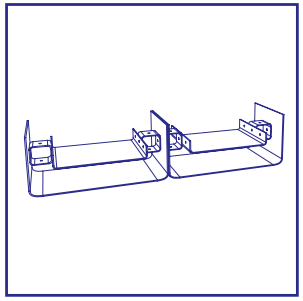

Tiered Storage

[future_arrangement]

CM . 002

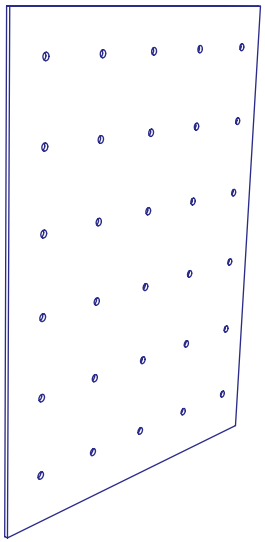

- One perforated 3mm aluminum sheet
- 30 6mm holes
- An aluminum pegboard, if you will
- 300mm W x 400mm L x 3mm T

FRONT

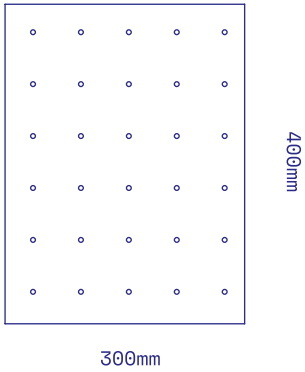

Used in the following arrangements:

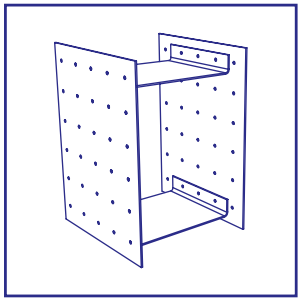

Layered Shelf

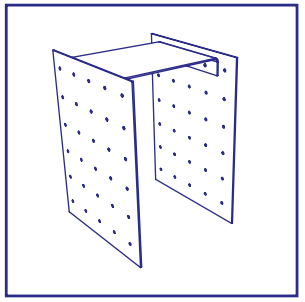

Flip Table

[future_arrangement]

CM . 003

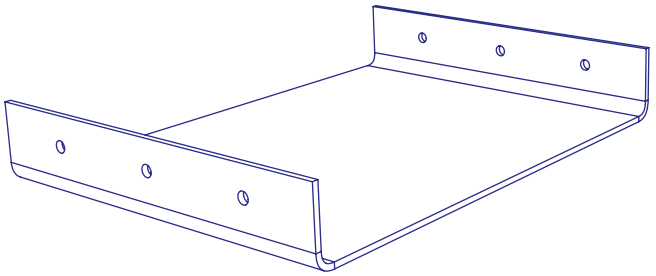

- One 3mm aluminum sheet, folded twice
- Perforated with three 6mm holes at each side
- Slight bend radius at folds
- 250mm W x 40mm H x 200mm D

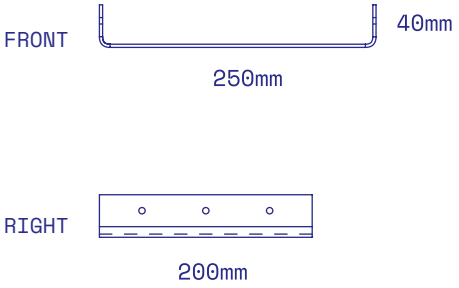

Used in the following arrangements:

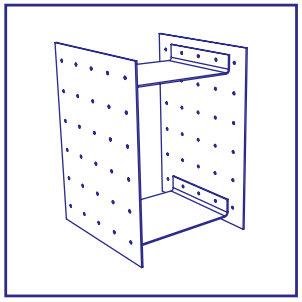

Layered Shelf

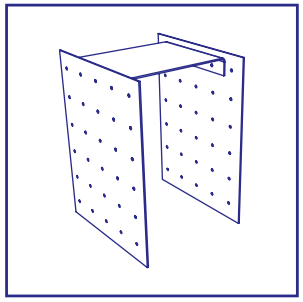

Flip Table

[future_arrangement]

CM . 004

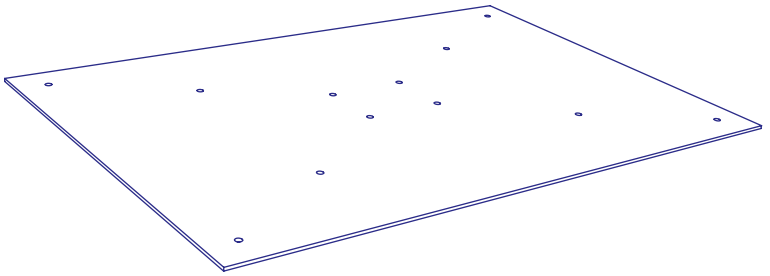

- One perforated 3mm aluminum sheet
- 12 6mm holes
- 600mm W x 400mm L x 3mm T

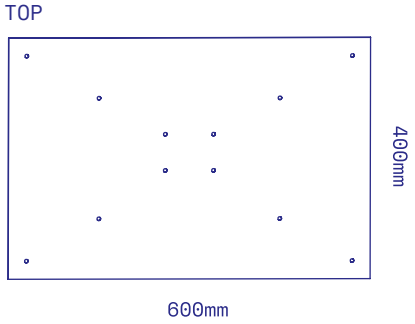

Used in the following arrangements:

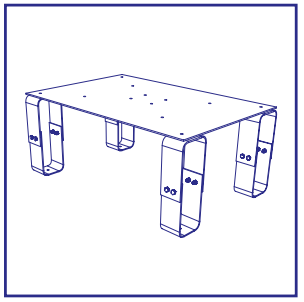

Space Table

[future_arrangement]

[future_arrangement]

CN.000

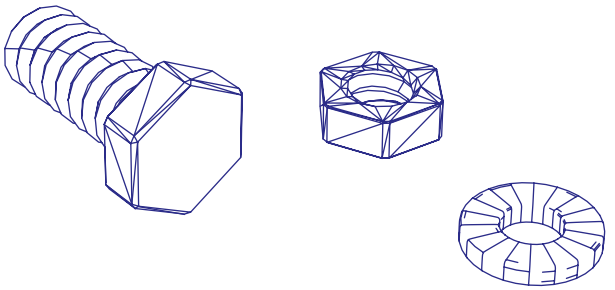

- Nuts, bolts and washers
- Available from IA in M4, M5, and M6
- Stainless Steel

Used in the following arrangements:

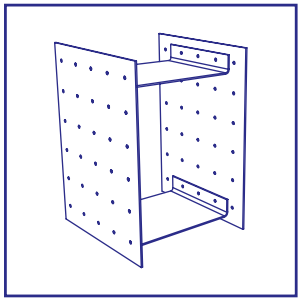

Layered Shelf

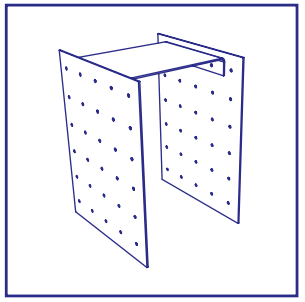

Flip Table

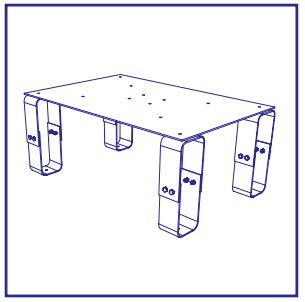

Space Table

CN • 001

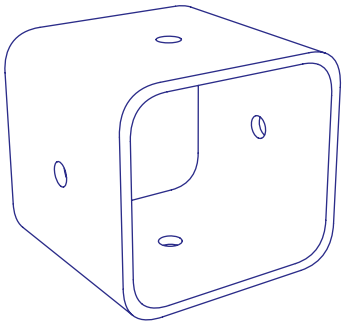

- 4 way cube connector
- Stack components vertically or horizontally
- Fabricated from a 3mm thick hollow rectangular tube
- 60mm W x 60m H x 60 D

FRONT

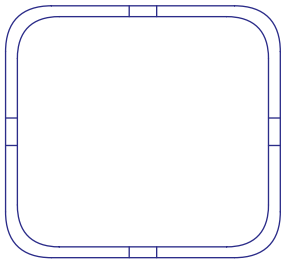

Used in the following arrangements:

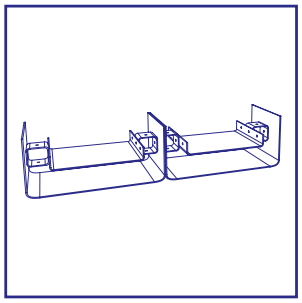

Tiered Storage

[future_arrangement]

[future_arrangement]

CN • 002

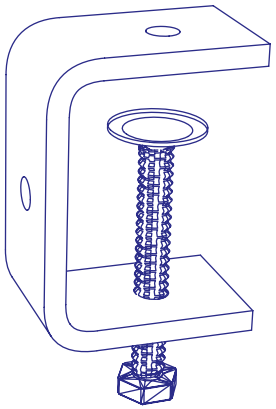

- Mini C Clamps
- Stainless Steel
- 25mm W x 55mm H x 35mm D

FRONT

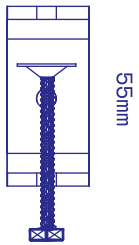

RIGHT

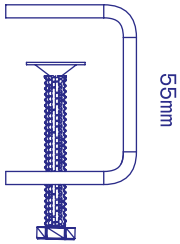

Used in the following arrangements:

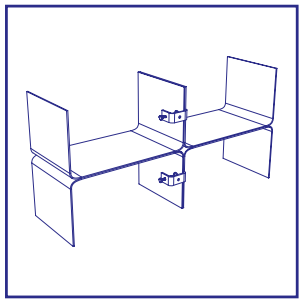

Folded Storage

[future_arrangement]

[future_arrangement]

SPACE TABLE

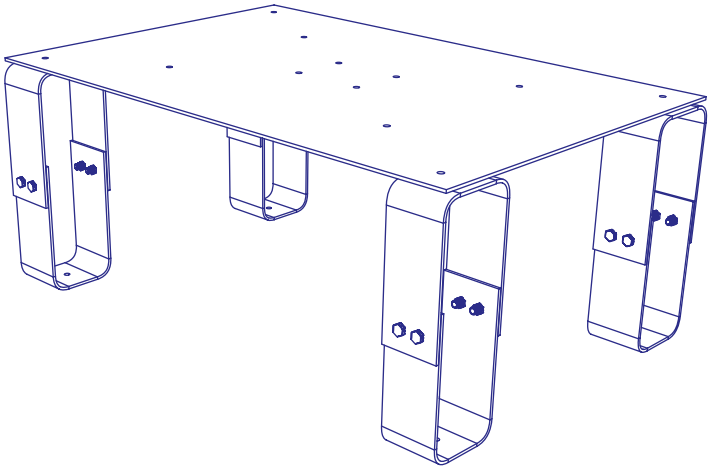

400mm W x 242mm H x 600mm D

FRONT

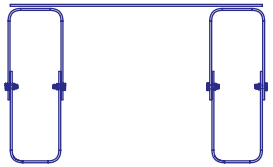

400mm

RIGHT

242mm

600mm

Includes the following components and connectors:

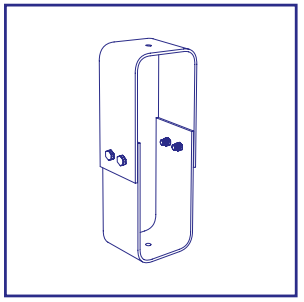

CM.000

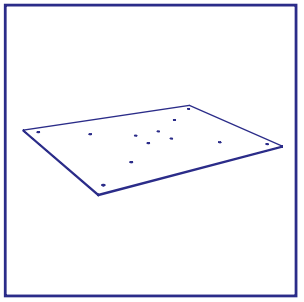

CM.004

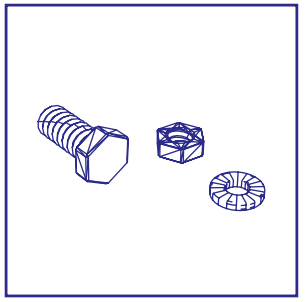

CN.000

TIERED STORAGE

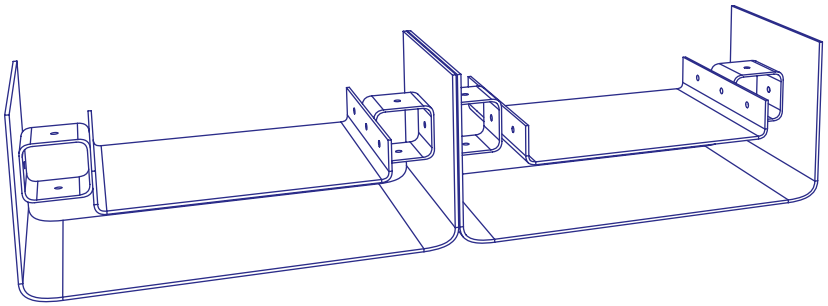

680mm W x 200mm H x 200mm D

FRONT

RIGHT

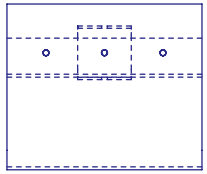

Includes the following components and connectors:

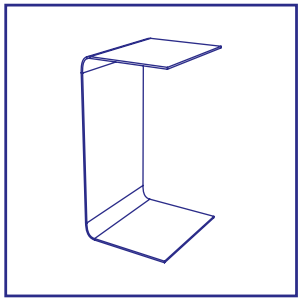

CM.001

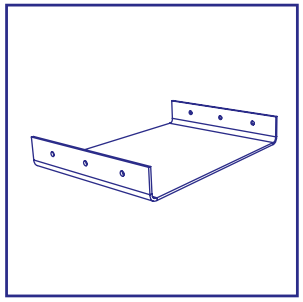

CM.003

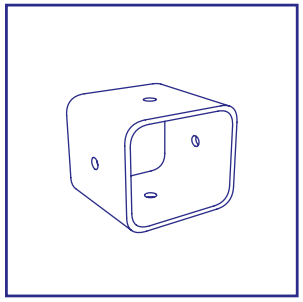

CN.001

LAYERED SHELF

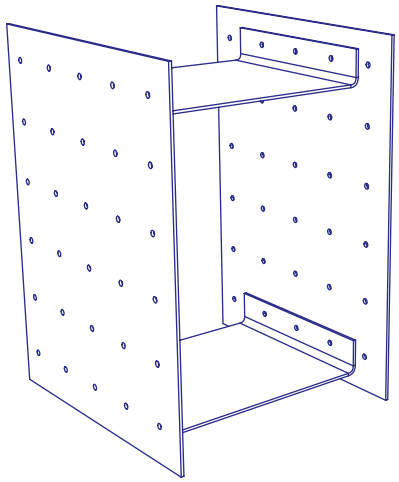

250mm W x 400mm H x 300mm D

FRONT

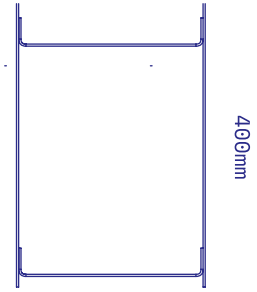

RIGHT

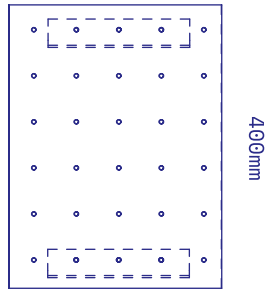

Includes the following components and connectors:

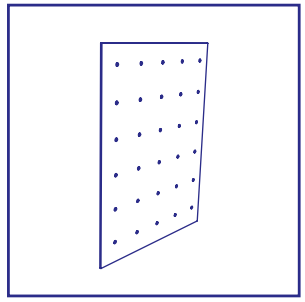

CM.002

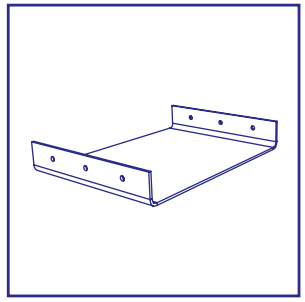

CM.003

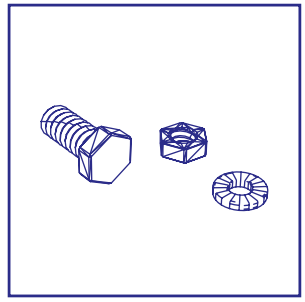

CN.000

FOLDED STORAGE

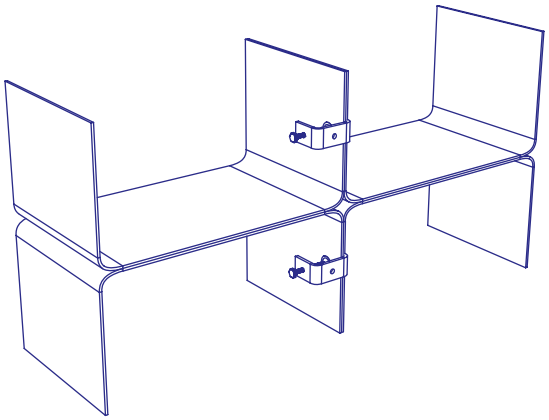

680mm W x 400mm H x 200mm D

FRONT

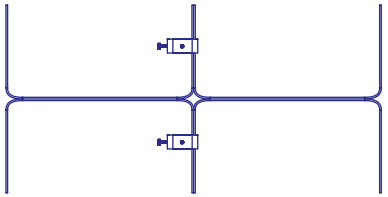

RIGHT

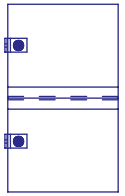

Includes the following components and connectors:

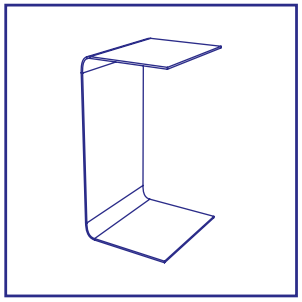

CM.001

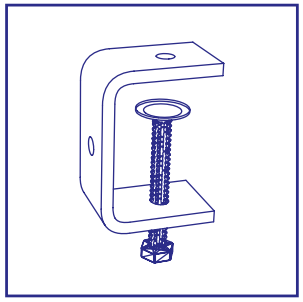

CN.002

FLIP TABLE

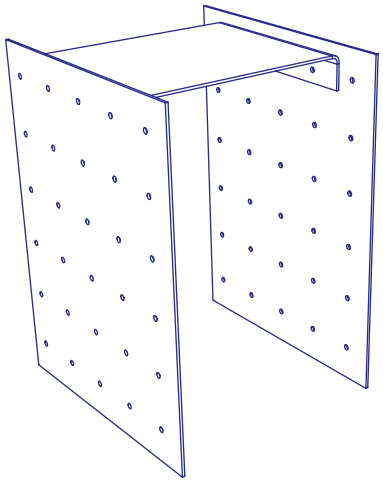

250mm W x 400mm H x 300mm D

FRONT

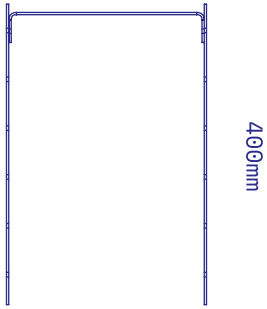

RIGHT

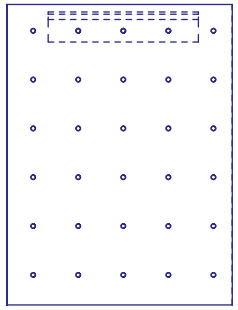

Includes the following components and connectors:

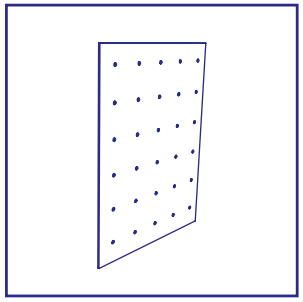

CM.002

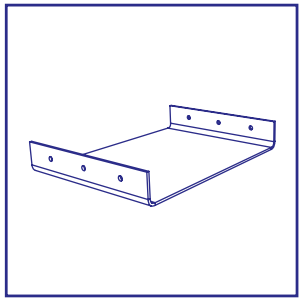

CM.003

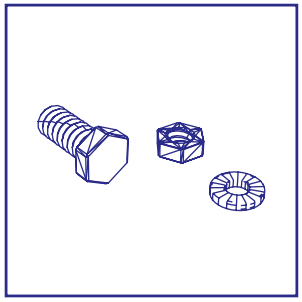

CN.000